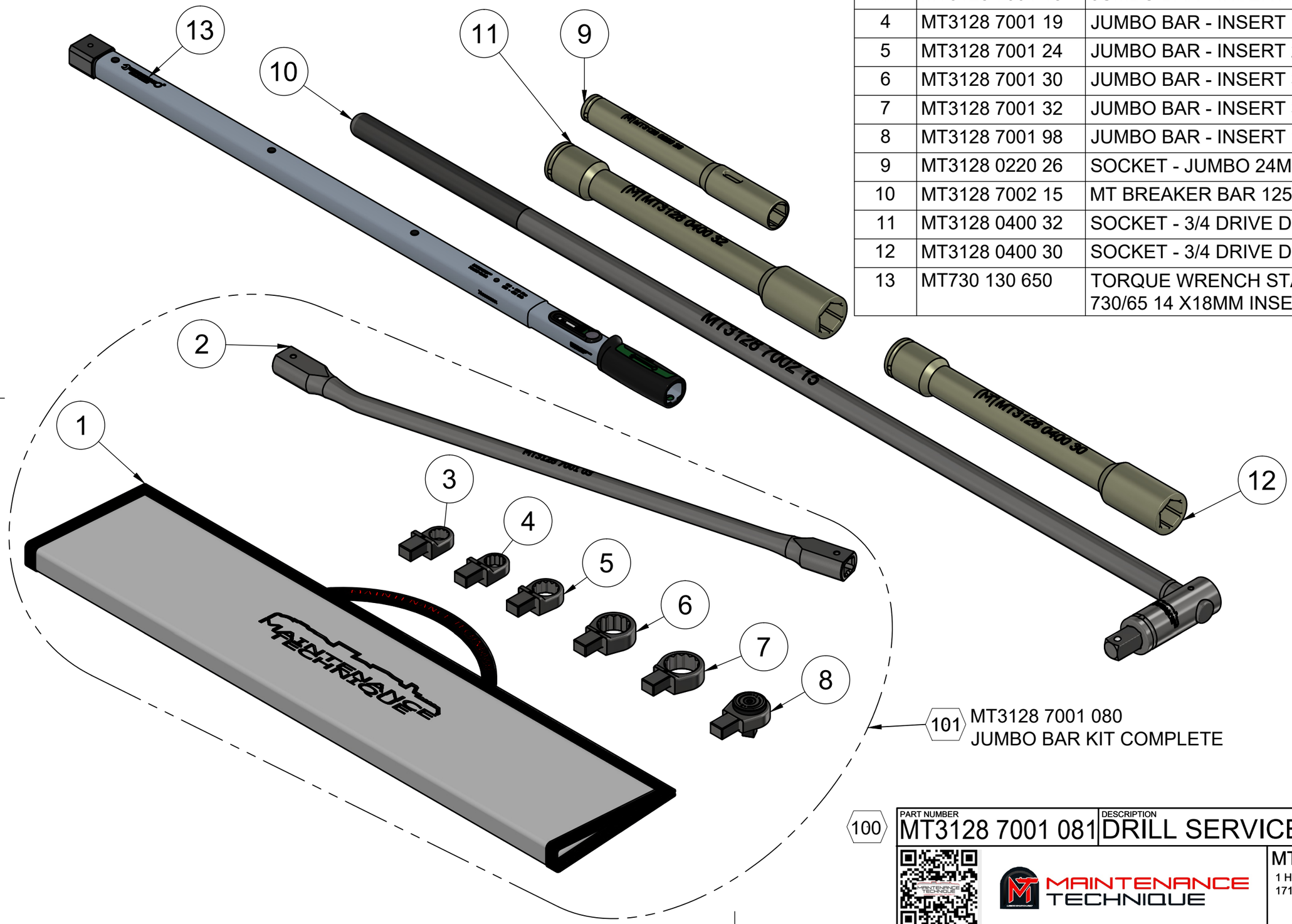

Parts List			
Item	Part Number	Description	Qty
1	MT3128 7001 99	JUMBO BAR - BAG	1
2	MT3128 7001 03	JUMBO BAR - DOUBLE END - BENT	1
3	MT3128 7001 18	JUMBO BAR - INSERT 18mm	1
4	MT3128 7001 19	JUMBO BAR - INSERT 19mm	1
5	MT3128 7001 24	JUMBO BAR - INSERT 24mm	1
6	MT3128 7001 30	JUMBO BAR - INSERT 30mm	1
7	MT3128 7001 32	JUMBO BAR - INSERT 32mm	1
8	MT3128 7001 98	JUMBO BAR - INSERT 1/2" RATCHET	1
9	MT3128 0220 26	SOCKET - JUMBO 24MM	1
10	MT3128 7002 15	MT BREAKER BAR 1250MM	1
11	MT3128 0400 32	SOCKET - 3/4 DRIVE DEEP 32MM	1
12	MT3128 0400 30	SOCKET - 3/4 DRIVE DEEP 30MM	1
13	MT730 130 650	TORQUE WRENCH STAHLWILLIE 730/65 14 X18MM INSERT 130-650NM	1

101 MT3128 7001 080
JUMBO BAR KIT COMPLETE

100

PART NUMBER
MT3128 7001 081

DESCRIPTION
DRILL SERVICE KIT 1

MAINTENANCE TECHNIQUE

MT Parts: 0407 059 610
1 Hahesy Circuit, Roseworthy S.A. 5371
171 Dugan Street, Kalgoorlie W.A. 6430
parts@mtunderground.com
www.mtunderground.com

SHEET
1/1